LRG-Series

ILLUMINATED DOUBLE POLE ROCKER & PADDLE SWITCHES

The double pole lighted version of the R-Series incorporates the same sleek lines as the original Curvette, in a double pole envelope. This illuminated version features silver-plated butt-action contacts with ratings to 20A/125, 15A 250VAC and withstand peak inrush currents up to 100 amps. Clear or translucent style rocker actuators and a choice of solder lug, .250 Tab and wire lead terminations enable this switch to adapt to high current applications.

Product Highlights:

- Ratings to 20A
- Neon or Incandescent Illumination
- Silver Plated Butt-contact mechanism
- Clear or translucent style rockers

Typical Applications:

- Power Supply
- Appliance
- Exercise Equipment
- Music Equipment

Carling Technologies®
Innovative Designs. Powerful Solutions.

Dielectric Strength
UL/CSA:
1000V - live to dead metal parts
& opposite polarity

Electrical Life
50,000 cycles

Operating Temperature
-40°F to 185°F (-40°C to 85°C)

LRGSCK611	-	R	S	-	B	-	B	/	250N
1 Base Part Number		*2 Actuator Style*	*3 Actuator Color*		*4 Bezel Color*		*5 Rocker Legend*		*6 Lamp Voltage*

1 BASE PART NUMBER: SERIES / CIRCUITRY / RATING [1] / TERMINATION
15A 250 VAC, 20A 125 VAC, 3/4 HP 125-250 VAC

	Solder Lugs	.250 Tabs	Wire Leads
Standard Base			
OFF-NONE-ON	**LRGSCK610**	**LRGSCK611**	**LRGSCK615**
European Base (22 x 30 mm cutout)			
OFF-NONE-ON (Single Pole)	**LRGSEK610**	**LRGSEK611**	**LRGSEK615**
15A 6-24 V [3]			
Standard Base			
OFF-NONE-ON	**LRGSCK510**	**LRGSCK511**	**LRGSCK515**
European Base (22 x 30 mm cutout)			
OFF-NONE-ON (Single Pole)	**LRGSEK510**	**LRGSEK511**	**LRGSEK515**

2 ACTUATOR STYLE
R Rocker (translucent) **C** Rocker (clear)

3 ACTUATOR COLOR
A Amber
B [3,5] Blue
C [4] White/Clear
G [5] Green
L [3] Lime Green
P Yellow
R Red (clear)
S Red
W Pale Red

4 BEZEL COLOR [1]
B Black **W** White

5 ROCKER LEGEND

	hot stamp
NO LEGEND	**0**
OFF-ON vertical	**A**
OFF-ON horizontal	**B**
O-I horizontal	**D**
O-I vertical	**E**
Dual OFF-ON, O-I vertical	**H**
Dual OFF-ON, O-I horizontal	**J**

6 LAMP VOLTAGE [2]
006V 6V incandescent
012V 12V incandescent
018V 18V incandescent
024V 24V incandescent
125N 125V neon
250N 250V neon

Notes:
1 Additional ratings, colors and clear style actuators are available. Consult factory.
2 Incandescent lamps must specify 15A 24V rating only.
3 Available with incandescent lamps only.
4 Clear color provided where specified with clear style rocker.
5 Available with clear style rocker only.

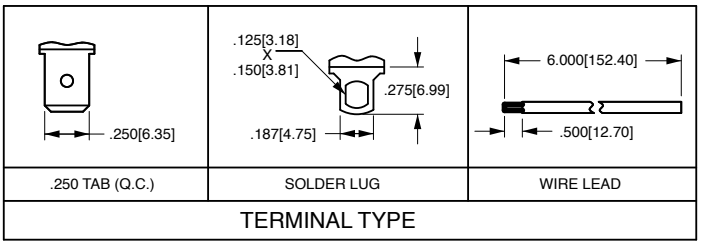

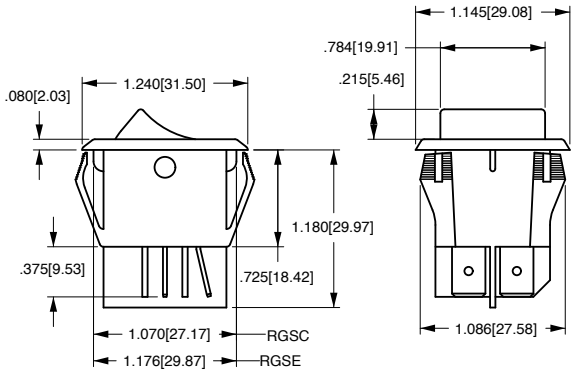

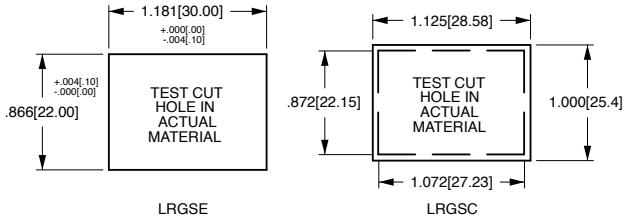

MOUNTING HOLE
Panel Thickness: .025 min - .187 max.
Specific cutout dimension range dependent on panel thickness and material.

*Manufacturer reserves the right to change product specification without prior notice.